OS-6812 GAV HAVALI SOMUN SÖKME

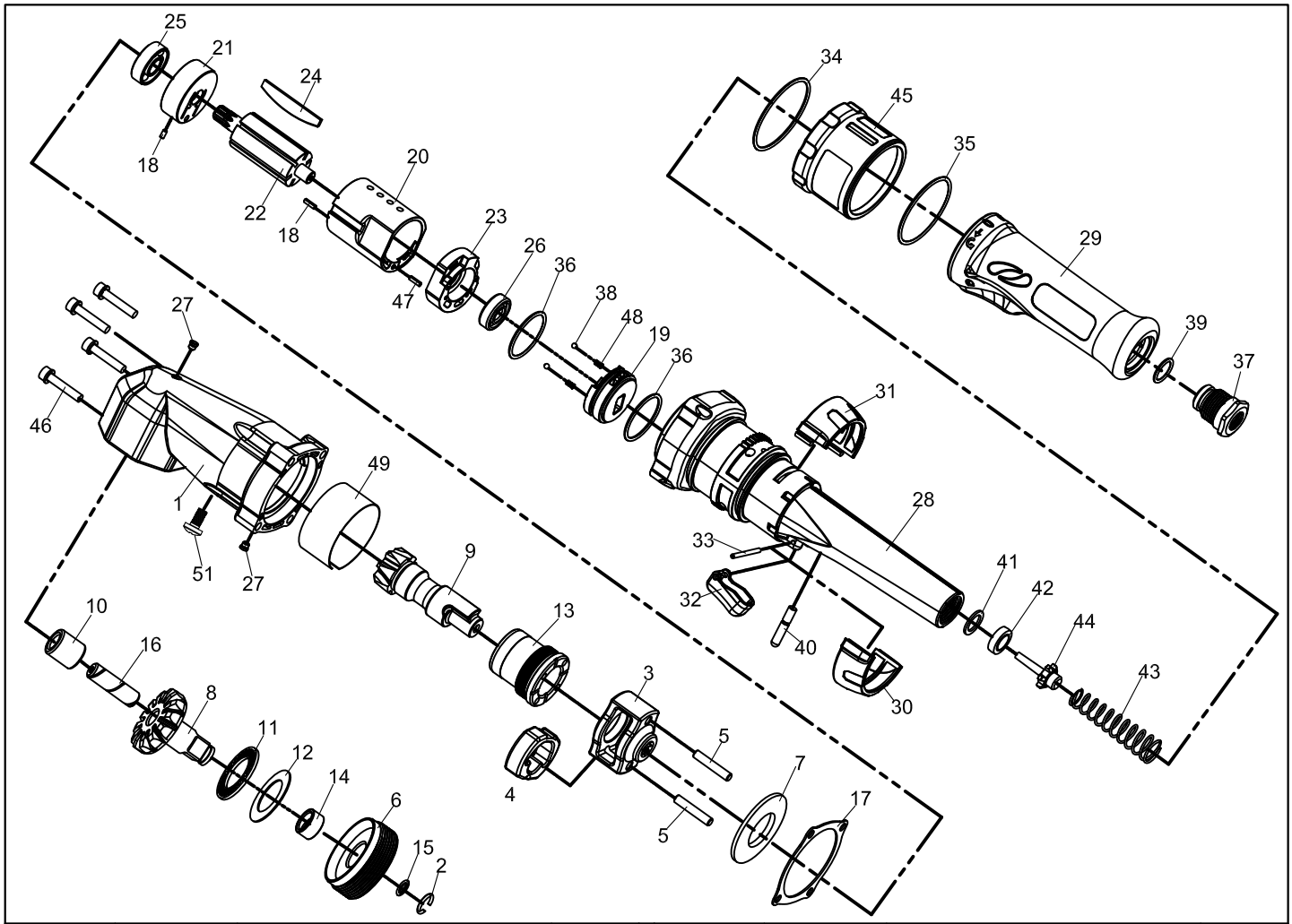

Item No.	Part No.	Description	Q'ty
1	681201	Angle Housing	1
2	328830-3	Socket Retainer	1
3	681203	Hammer Frame	1
4	328825	Hammer	1
5	681205	Hammer Pin(2)	2
6	681206	Retaining Nut	1
7	681207	Washer	1
8	683808	Bevel Gear	1
9	681209	Pionion Gear	1
10	681210	Bushing	1
11	681211	Thrust-Bearing	1
12	681212	Flat-Washer	1
13	681213	Bearing	1
14	681250	Anvil-Bushing	1
15	328829-3	O-Ring	1
16	681216-1	Upper-Shaft	1
17	681217	Gasket	1
18	308013	Spring Pin	2
19	681219	Reverse Valve	1
20	681220	Cylinder	1
21	681221	Front End Plate	1
22	681222	Rotor	1
23	681223	End Plate	1
24	681224	Blade	6
25	B6000ZZ	Ball Bearing	1
26	B608ZZ	Bearing	1
27	638047	Grease Fitting	2
28	681228	Motor Housing	1
29	681229	Composit Grip	1

Item No.	Part No.	Description	Q'ty
30	681230	Reverse Ring	1
31	681231	Reverse Ring	1
32	681232	Trigger	1
33	SPP3032	Spring Pin	1
34	OR3326	O-Ring	1
35	OR4202	O-Ring	1
36	OR3002	O-Ring	2
37	681237	Air Inler Bushion	1
38	SB0003-1	Stell Ball	2
39	OR1202	O-Ring	1
40	681240	Trigger pin	1
41	328825S	Spacer	1
42	328835	Valve Seat	1
43	681243	Spring	1
44	328804V	Valve Stem	1
45	681245	Exhaust Deflector	1
46	CAP1025	Screw	4
47	SPP0208	Spring Pin	1
48	681248	Spring	2
49	681249	Stell Cylinder	1
51	681253	Screw	1
For 1/2" Dr. Version			
2	328830-4	Socket Retainer	1
15	OR7718	O-Ring	1
8	681208	Bevel Gear	1